36.1 A 32Gb/s 10.5Tb/s/mm 0.6pJ/b UCIe-Compliant Low-Latency Interface in 3nm Featuring Matched-Delay for Dynamic Clock Gating

Mu-Shan Lin[1], Chien-Chun Tsai[1], Shenggao Li[2], Wei-Chih Chen[1], Wen-Hung Huang[1], Yu-Chi Chen[1], Yu-Jie Huang[1], Alan Drake[3], Chin-Hua Wen[1], Paul Ranucci[3], Hsin-Hung Kuo[1], Aidong Yin[3], Shu-Chun Yang[1], Farsheed Mahmoudi[3], Han-Tzung Ke[1], Chao-Chieh Li[1], Nai-Chen Cheng[1], Jimmy Wang[4], Kevin Lin[1], Harry Liao[4], Jie-Ren Huang[1], Meng-Hsuan Wu[4], Kenny Cheng-Hsiang Hsieh[1], Nicholas Amatruda[5], William Polanco[5], David King[5], Todd Basso[6], Anwar Kashem[6]

[1]TSMC, Hsinchu, Taiwan
[2]TSMC, San Jose, CA
[3]TSMC, Austin, TX
[4]TSMC, Nanjing, China
[5]AMD, Austin, TX
[6]AMD, San Jose, CA

2025 IEEE International Solid-State Circuits Conference (ISSCC) | 979-8-3315-4101-9/25/$31.00 ©2025 IEEE | DOI: 10.1109/ISSCC49661.2025.10904767

Demand for chiplet integration using 2.5D or 3D packaging has surged due to the AI/ML-driven growth in computing performance. Universal Chiplet Interconnect Express (UCIe) has been developed to standardize chiplet interconnects, focusing on bandwidth density, energy efficiency, and latency. Dynamic clock gating is crucial for reducing power consumption, but transitioning from clock-gated to ungated modes introduces challenges due to the instantaneous current surge (Di/Dt), which can cause significant supply voltage droop. This droop leads to data sampling misalignment and bit errors. This paper presents a 32Gb/s, 64-lane UCIe module with a matched-delay architecture designed to address these challenges and ensure low power and low latency operation.

Figure 36.1.1 shows the cross-section of two top SoC dies connected via a silicon bridge in a 2.5D advanced packaging technology. Each die features two ×64 UCIe modules, interconnected through microbumps (ubumps) on a 3100×1500μm² silicon interposer. The modules are designed with a 10-column bump pattern with a minimum pitch of 45μm, confined within a 388.8μm beachfront width, and follow a pre-defined signal order to ensure link interoperability. The module supports data rates ranging from 4Gb/s to 32Gb/s and operates in quad data rate (QDR) mode at 32/24Gb/s and double data rate (DDR) mode at 16/12/8/4Gb/s. It also supports various bus ratios (4:1, 8:1, and 16:1) to accommodate different SoC applications, with digital logic operating between 0.5GHz and 2GHz.

Figure 36.1.2 illustrates the clock architecture on the transmitter side. LCLK, generated by the system PLL, is used by the logic-PHY, while ACLK, generated by the PHY PLL, is used by the analog PHY. The transmitter supports two clock domain crossing modes: DESKEW mode for low latency with one retiming flip-flop, and TXFIFO mode for handling severe LCLK temperature or voltage drifts, adding 2-4T LCLK latency and 0.015pJ/b power consumption. The multi-phase delay with a digitally-controlled delay line (MPD_DCDL) has 12 inverting delay stages, sharing the same coarse and fine-tuning controls. Coarse tuning adjusts the inverter strength, while fine-tuning uses a monotonic capacitor switching scheme. This setup ensures a 30-degree equal delay per stage when the phase detector (PD1) in the delay-locked loop (DLL) aligns the edges between PH0 and PH360. The 30-degree phase delay is further refined by a subsequent inverter-based phase interpolator (PI) with 5b resolution. PI-Data/PI-Fclk generate clock phases for Tx data and forwarded clocks. In DESKEW mode, ACLK's Tx data CK0 is synchronized with LCLK and remains at phase-0 in Tx FIFO mode. ACLK's CK45/CK135 for forwarded clocks always maintain a 45-degree phase relationship with CK0/CK90 for QDR operation. The PI-Fclk receives additional control from the training protocol after link establishment to center eye capture. The phase rotation algorithm, combined with specific wiring configurations for clock selection, ensures consistent fine-tune adjustments (e.g., FT+ or FT-) for systematic INL cancellation among quadrature phases for both data and clock paths, achieving a 0.9375-degree phase adjustment resolution (360/12/32) with 1.06-LSB INL and 0.37-LSB DNL.

Figure 36.1.3 depicts the Tx architecture with a 2-tap, 1UI-based feed-forward equalizer (FFE) to counter channel insertion loss. Data and forwarded clock lanes have identical structures for matched delay and synchronization using 0, 90, 45, and 135-degree phases. Each post-driver consists of nine SST drivers calibrated for a 25Ω output impedance. A 16:4 serializer uses pulse-level sampling to reduce latency and power by selecting signals via clock pulses instead of clock edges. This 4:1 MUX achieves low latency with a single clock-divider-delay, resulting in a combined FFE, retimer, and MUX latency of 6UI. To enable clock gating between 'mission-mode' and 'idle-mode', a data-driven forwarded clock generator is introduced. It flexibly produces forwarded clocks by manipulating the synchronized clock patterns in low-speed logic, while maintaining the crucial data-clock phase relationship. The duty cycle corrector (DCC) and quadrature error corrector (QEC) are positioned midway to ensure clock quality. The analog DCC facilitates runtime calibration, and the clock is subsequently gated to save power during idle. The QEC, controlled digitally by an FSM, features chopping cancellation to eliminate DC offset and device mismatches. The DCC and QEC achieve less than 0.3% duty cycle error and 330fs quadrature phase error.

A matched-delay architecture is vital for dynamic clock gating to ensure that the first clock transition after un-gating captures data correctly without added latency from a clock preamble. The receiver's DCC/QEC must be digital to support instant mission-mode operation. The challenge is exacerbated when rapid Di/Dt induces significant dynamic voltage droop on the power rail, which cannot be recovered through clock preamble and exceeds the receiver-side DLL's tracking capability at 32Gb/s. This necessitates a well-matched forwarded clock architecture. Figure 36.1.4 illustrates the receiver architecture where DATA and CKP/CKN delays are matched, maintaining a 45-degree phase relationship up to the sense amplifier flip-flop (SAFF). The data and clock paths share similar circuit topologies (e.g., RXAMP and Deskew) to ensure phase consistency despite voltage droop or temperature drift. However, physical mismatches, such as excessive RC delay in the clock path, are compensated by gate delays (e.g., DCDL+INV-chains = ClkTree+DCC/QEC) in the data lane. Figure 36.1.4 shows that a 20mV Vcc perturbation causes an absolute 11.3/11.5ps delay in the data/clock path, resulting in only 0.2ps delay difference between the two delay matched structures. Device variability is further managed through calibration. The data lane front end is designed as a hardened macro under each receiver bump, with one duplicated instance for the Track lane (TRK). During cold boot, the Track lane minimizes static mismatch between the data (DTS) and clock (CTS) by aligning CKP with TRK via per-lane deskew buffers in the clock path, while both TRK and CKP are sending 45-degree clock phase. Subsequently, the training protocol conducts PI training and data-lanes' per-lane deskew based on individual built-in self-test (BIST) works to align CKP to the data eye center while enlarging aggregate eye margin. During mission mode, a clock pattern on the TRK lane can monitor skew between CKP and TRK. If mismatch between CKP and TRK is detected, the de-skew buffers on the clock lane is incrementally tuned to re-align CKP to the data eye center (Fig. 36.1.4, runtime calibration). Inverter-based amplifiers with gain peaking are used in both data and clock paths to extend bandwidth and restore signals to rail-to-rail levels. To mitigate PMOS/NMOS skew causing pulse-width distortion, P/N ratio calibration is introduced to counter systematic process skews. Each inverter stage includes multiple tri-state inverters, and a replica set is used for DC calibration. An FSM ensures equal turn-on resistance for PMOS and NMOS transistors, maintaining a common-mode voltage output (VREF = VCCIO/2) across PVT corners when biased at the same common-mode voltage.

Figure 36.1.5 shows the physical implementation, highlighting a floorplan with five rows of data-lane clusters. Known good die (KGD) sorting is crucial for quality testing, but the small ubump pitch restricts power and ground bump access. To achieve a 32Gb/s at-speed test and avoid significant IR drop and power bouncing, the module has been divided into nine segments, with only one segment (up to 8 transceivers) activated at a time for bit-error rate testing. The TX and RX clusters are positioned at opposite ends according to the official UCIe bump map. High-speed data from the transmitter traverses across half the module through rebuffering stages to the receiver to form a loop-back path during KGD sorting, while maintaining a matched-delay structure to achieve synchronization. Two key decoupling capacitors are used: the super high-density metal-insulator-metal (SHDMIM) capacitor in the top-die and the embedded deep trench capacitor (eDTC) in the interposer die. The SHDMIM capacitor, though more costly (50nF/mm²), offers low ESR and resonates power plane impedance beyond 150MHz, while the eDTC provides higher capacitance efficiency (1100nF/mm²) and mitigates impedance above 40MHz. Figure 36.1.5 shows a reduction in peak-to-peak voltage ripple from 102mV to 32mV after adding eDTC, highlighting the importance of advanced packaging technologies for improved power integrity.

Figure 36.1.6 illustrates the die-to-die channel routing style using five metal layers in the bridge die. It also shows the signal integrity of insertion loss and crosstalk based on the voltage transfer function (VTF). Each signal is shielded by ground to minimize crosstalk noise. Figure 36.1.6 also shows the eye-opening distribution measured by the pi-code on the y-axis across 64 lanes in nine segments. After per-lane deskew correction, the eye-opening improves from a width of 26 pi-codes (-12 to +14) to a width of 60 pi-codes (-30 to +30), enhancing the eye margin by 34% UI and centering the eye at pi-code=0. The 2D eye shmoo, obtained by sweeping the pi-code on the x-axis (316fs/code) and the Vref-code on the y-axis (16mV/code), achieves an eye width of 19ps (61% UI) and an eye height of 56% at 32Gb/s operation.

Figure 36.1.7 presents a die photograph from a top-die, bird's-eye view, detailing the die-to-die micro-bumps and the larger pitch probing bumps used for single-die CP testing. This work demonstrates a high-speed UCIe interface featuring 64 Tx lanes and 64 Rx lanes, achieving 32Gb/s per lane and a 10.5Tb/s/mm beachfront. The system achieves an energy efficiency of 0.6pJ/b in full burst mode, which improves to 0.46pJ/b with 50% burst mode and 50% clock gating. A comparative analysis with state-of-the-art technologies is provided in the accompanying table.

Authorized licensed use limited to: Synopsys. Downloaded on February 15,2026 at 15:50:34 UTC from IEEE Xplore. Restrictions apply.

No	Data Rate (Gb/s)	PCLK (GHz)	Bus Ratio	LCLK (GHz)
1	32/24	8/6 (QDR)	16:1	2/1.5
2	16/12/8	8/6/4 (DDR)	16:1	1/0.75/0.5
3	16/12/8/4	8/6/4/2 (DDR)	8:1	2/1.5/1/0.5
4	8/4	4/2 (DDR)	4:1	2/1

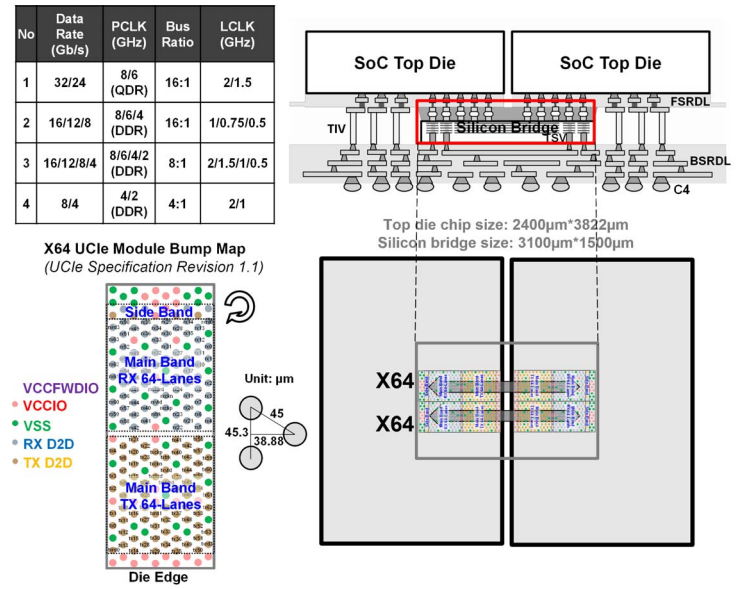

Figure 36.1.1: System overview including multi-rate support, package cross-section, chip sizes, and module bump map.

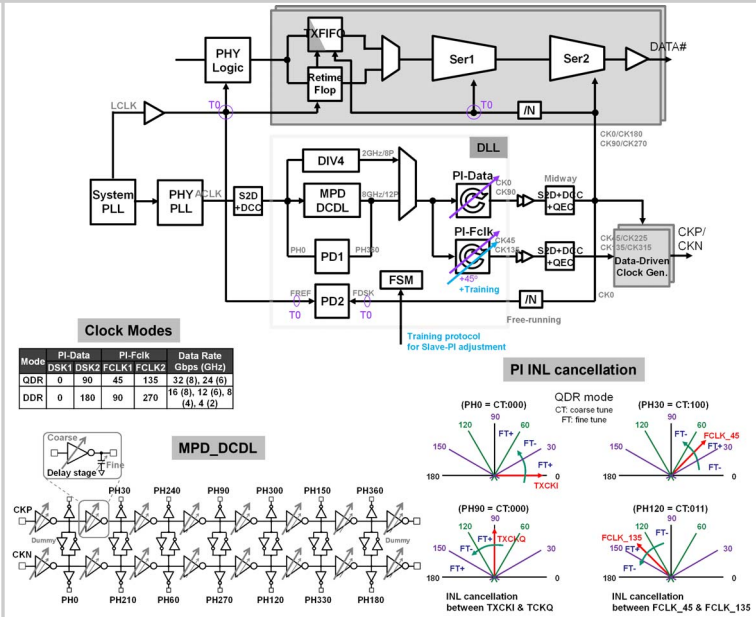

Mode	PI-Data DSK1	PI-Data DSK2	PI-Fclk FCLK1	PI-Fclk FCLK2	Data Rate Gbps (GHz)
QDR	0	90	45	135	32 (8), 24 (6)
DDR	0	180	90	270	16 (8), 12 (6), 8 (4), 4 (2)

Figure 36.1.2: Clock architecture, MPD_DCDL and INL cancellation.

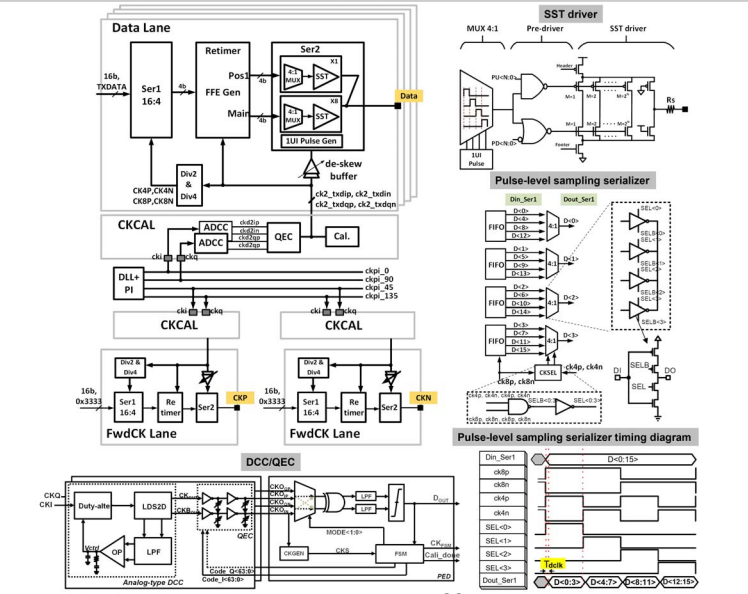

Figure 36.1.3: Transmitter circuit architecture: SST driver, pulse-level sampling serializer, and DCC/QEC.

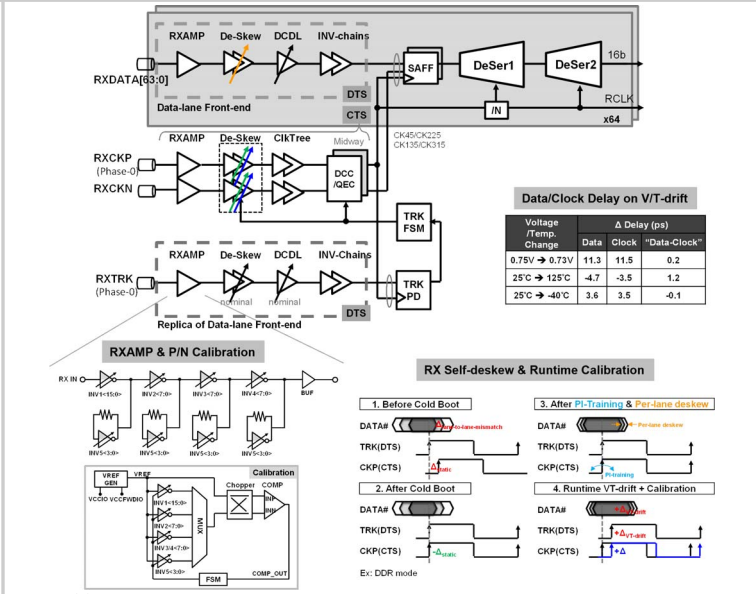

Voltage /Temp. Change	Δ Delay (ps) Data	Clock	"Data-Clock"
0.75V → 0.73V	11.3	11.5	0.2
25°C → 125°C	-4.7	-3.5	1.2
25°C → -40°C	3.6	3.5	-0.1

Figure 36.1.4: Receiver circuit architecture: matched-delay topology, Rx self-deskew and runtime calibration, and inverter-based RXAMP with P/N skew calibration.

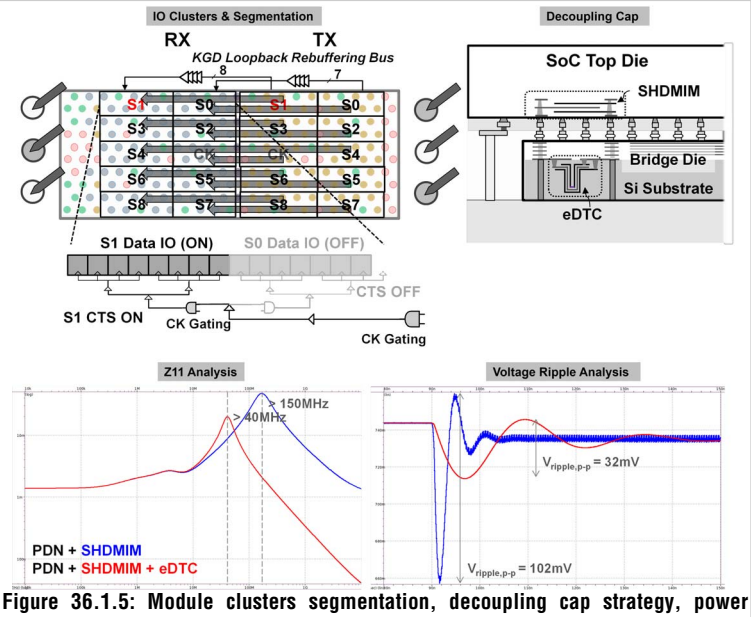

Figure 36.1.5: Module clusters segmentation, decoupling cap strategy, power impedance, and voltage ripple performance.

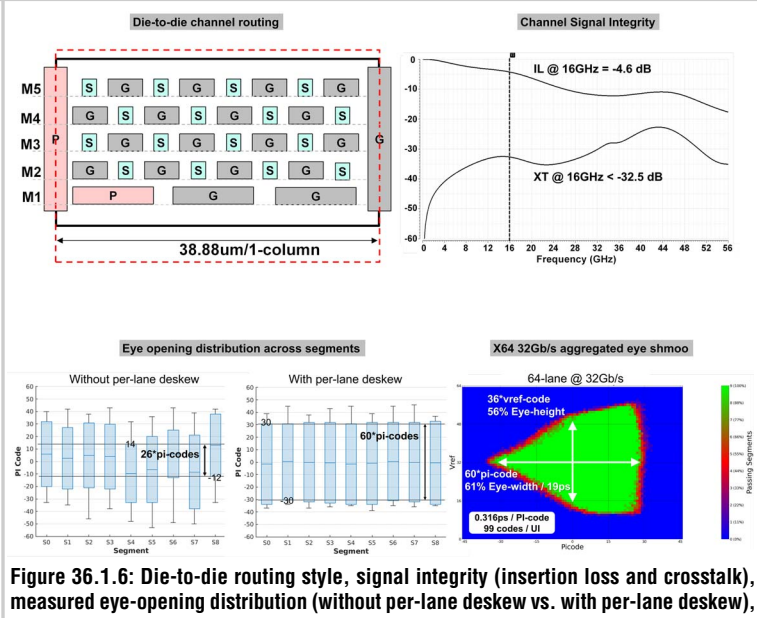

Figure 36.1.6: Die-to-die routing style, signal integrity (insertion loss and crosstalk), measured eye-opening distribution (without per-lane deskew vs. with per-lane deskew), and ×64 32Gb/s aggregated eye shmoo.

Authorized licensed use limited to: Synopsys. Downloaded on February 15,2026 at 15:50:34 UTC from IEEE Xplore. Restrictions apply.

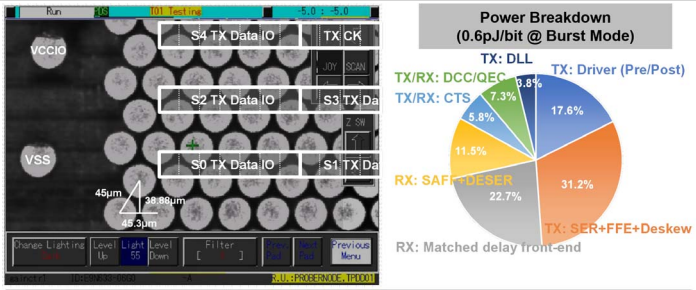

	UCIe Spec.	[1] ISSCC'23	[2] VLSI'23	[3] ISSCC'24	[4] VLSI'24	This Work
Technology	-	4nm FinFET	5nm	4nm	3nm	3nm FinFET
Bus Width	64 / Module	39 / Slice	19 / Module	10 / Slices	36 / Slice	64 / Module
Module Width (µm)	388.8	250	330	260	300	388.8
Channel	Advanced Package	Si Interposer	On-chip Channel	Substrate Channel	On-chip Channel	Si Interposer
Channel Length	< 2mm	3mm	1.2mm	10mm	2mm	1.7mm
D2D Bump Pitch (µm)	45	50	-	130	-	45
Data Rate (Gb/s/pin)	32 (Max.)	32	25.2	48	32	32
Energy Effeciency (pJ/bit)	0.6	0.44	0.19	0.67	0.36	0.6* 0.46**
Shoreline BW Density (Tb/s/mm)	10.5	8	5.8	1.85	3.84	10.5

** 100% Burst Mode*
*** 50% Burst Mode + 50% Clock Gating*

Figure 36.1.7: Die photograph (micro-bumps and probing bumps), power breakdown, and comparison.

References:

[1] K. Seong et al., "A 4nm 32Gb/s 8Tb/s/mm Die-to-Die Chiplet Using NRZ Single-Ended Transceiver With Equalization Schemes And Training Techniques," *2023 IEEE International Solid-State Circuits Conference (ISSCC)*, San Francisco, CA, USA, 2023, pp. 114-116.

[2] Y. Nishi et al., "A 0.190-pJ/bit 25.2-Gb/s/wire Inverter-Based AC-Coupled Transceiver for Short-Reach Die-to-Die Interfaces in 5-nm CMOS," 2023 IEEE Symposium on VLSI Technology and Circuits (VLSI Technology and Circuits), Kyoto, Japan, 2023, pp. 1-2.

[3] K. Seong et al., "A 4nm 48Gb/s/wire Single-Ended NRZ Parallel Transceiver with Offset-Calibration and Equalization Schemes for Next-Generation Memory Interfaces and Chiplets," 2024 IEEE International Solid-State Circuits Conference (ISSCC), San Francisco, CA, USA, 2024, pp. 250-252.

[4] J. Gu et al., "A 32Gb/s 0.36pJ/bit 3nm Chiplet IO Using 2.5D CoWoS Package with Real-Time and Per-Lane CDR and Bathtub Monitoring," 2024 IEEE Symposium on VLSI Technology and Circuits (VLSI Technology and Circuits), Honolulu, HI, USA, 2024, pp. 1-2.

Authorized licensed use limited to: Synopsys. Downloaded on February 15,2026 at 15:50:34 UTC from IEEE Xplore. Restrictions apply.

 979-8-3315-4101-9/25/$31.00 ©2025 IEEE